GE-BF60NL2M5X

Outdoor bullet-type Varifocal IP Camera with IR (N-Series)

Features

- 1/2.8" SONY Starvis Back-illuminated CMOS Sensor
- 2.7-13.5mm 5X Motor Zoom Auto Focus Lens
- Starlight
- HISILICON IMX307 + Hi3516C
- H.265+/H.265/H.264+/H.264 Compression Method
- WDR (Wide Dynamic Range)
- Improved noise figure with the enhanced 3DNR
- One touch 3-Axis locking bracket, Easy Installation Pad
- IP66 Protection

AVAILABLE ACCESSORIES

GE-A0302

GE-A0302+GE-A0811

GE-A0302+GE-AJ0501

GE-YXH0302+GE-A0601

Dimension (unit:mm)

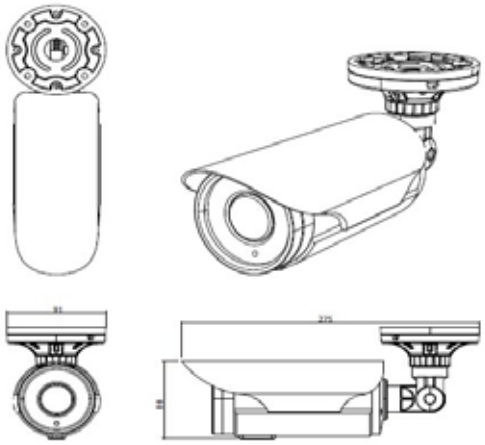

Weight

1400g

Specifications

ITEM	GE-BF60NL2M5X
Imaging Sensor	1/2.8" SONY Starvis Back-illuminated CMOS Sensor
Effective Pixels	1985(H)*1105(V). 2Mega pixels
TV System	PAL/NTSC
Scanning mode	Progressive Scan
S/N Ratio	≥52dB
Day & Night mode	ICR by Auto, Day, Night, External, Color DN
WDR	WDR (ATR-EX)
DNR	2D-NR, 3D-NR
Auto Exposure	Automatic (Priority: Frame rate/Low noise), Manual
Shutter Speed	Auto: PAL 1/25-1/10000Sec; NTSC 1/25-1/10000Sec
Gain Control	Automatic: ~ Max. 46.2dB / Manual: ~ Max. 46.2dB
Auto White Balance mode	ATW-Indoor/Outdoor, Automatic, Shade, Clear sky, Fluorescent light, Light bulb, Flame, Manual
Lens	2.7-13.5mm Motorized Auto Focus Lens
LED	42μ x 4PCS IR Distance 60m Max
Functions	Motion Detection, Privacy Mask, VCA(Video Contents Analysis), Defog, D-Zoom, HLC/BLC, Mirror/Flip, Sens-up(Slow shutter), Hue, Brightness, Contrast, Saturation, Sharpness, LDC(Lens Distortion Compensation), Auto-Flickerless, Smart IR, VerticalView
Storage Temperature	-20℃ ~ +60℃ RH95% Max
Operating Temp	-20℃ ~ +60℃ RH95% Max
Dimension	182(W) x 66(H) x 67.5(D)mm
Housing	IP66, Aluminum Cast, Dual window, One touch 3-Axis locking bracket, Easy Installation Pad
Power Source	PoE(IEEE Std. 802.3af), 8W (PoE power), DC12V±10%, 1050mA
NETWORK SPECIFICATION	
Video Compression	H.264/H.264+/H.265/H.265+/JPEG/AVI /MJPEG
Video Resolution	1920x1080, 1600 x1200, 1280x960, 1280x720, 800x600, 640x480, 640x360, 320x240
Video Frame Rate	1920*1080@30fps
IE Brower	IE8-11, Google Chrome, Firefox, Safari, Mac Safari
Smart Phone	iPhone, iPad, Android, Android Pad
P2P	YES, Support QR Code
Ethernet	RJ-45 (10/100Base-T)
Network Time Sync.	Synchronize Computer/NTP Server, Manual
Video Delay	0.3S (Within the Lan)
RS485	/
Remote Upgrade	Using Web Browser
Protocol	TCP/IP,ICMP,HTTP,HTTPS,FTP,DHCP,DNS,DDNS,RTP,RTSP, RTCP,NTP,SMTP
Client Software	Built-In Web, ONVIF Compatible 3rd Party VMS
SDK Support	API, ONVIF Profile S Compliant
SD memory card	Optional, Support Max 128GB
Audio & Alarm	Not Available /Optional

(*) Design and specifications are subject to change for product improvements without prior notice.

GI CCTV, LLC 815 S.Great southwest parkway Grand Prairie, TX 75052 USA
www.gicctv.com email: info@gicctv.com Tel: +1 888-646-4478 EXT 101